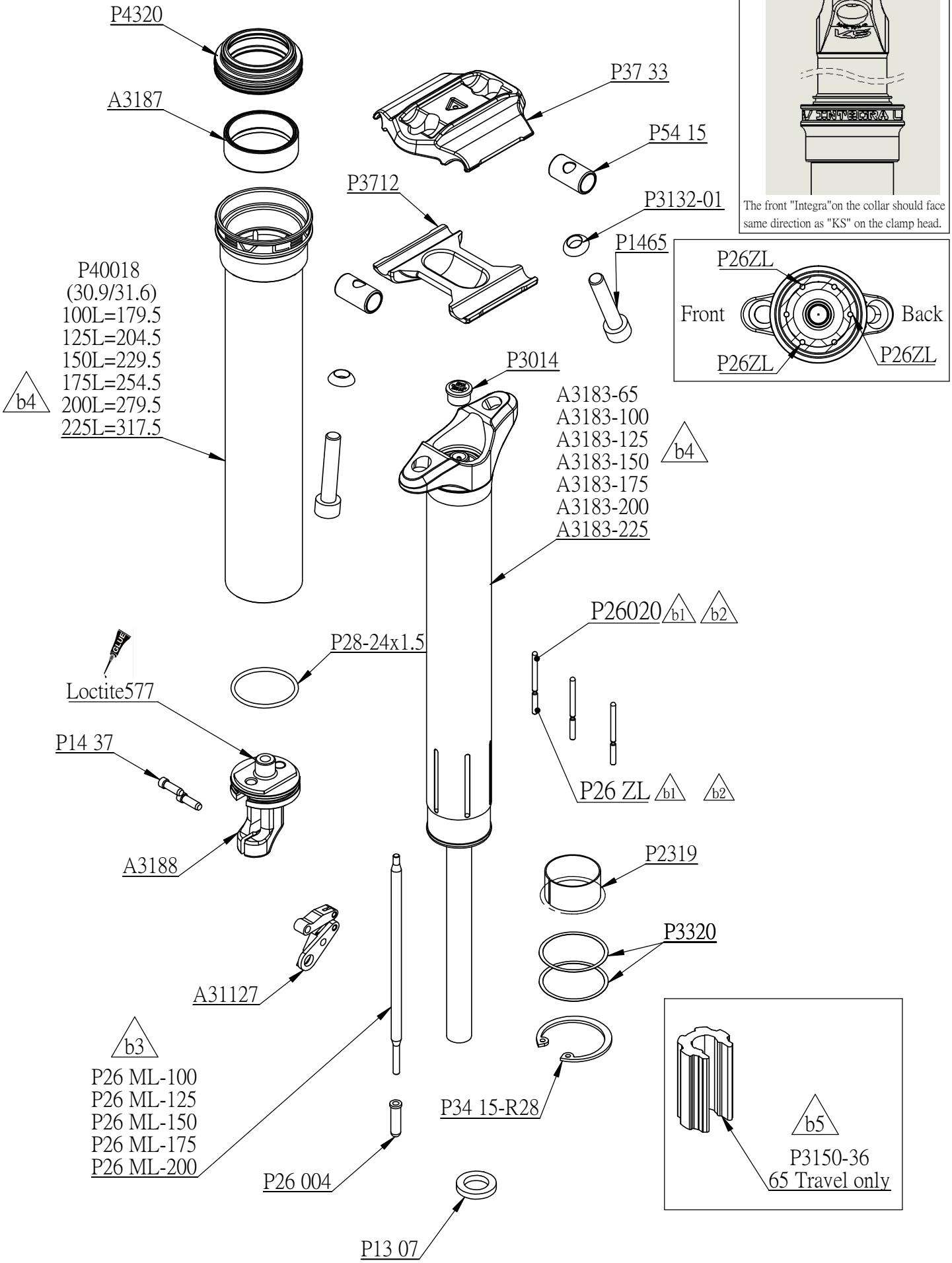

Model : LEVintegra(A12)-C217 Date : 20240930 Rev :b5